Math 113 Practice Problems for Final Exam

This Practice final has questions from Chapter 1, Chapter 5, Chapter 2 and then Geometry. The final may not be presented in this same order.

1. Sketch a graph of each line and identify the points you used to draw the line.
   a. $y=2x$

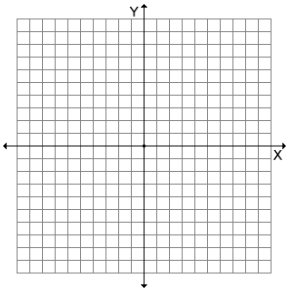

   b. $x=3$

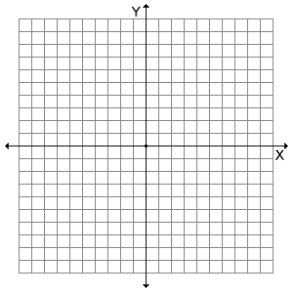

   c. $-4x + 3y = 24$

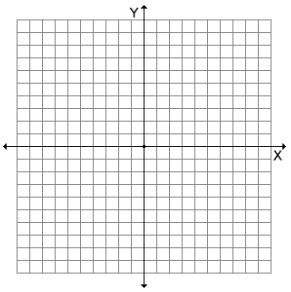

   d. $y=5$

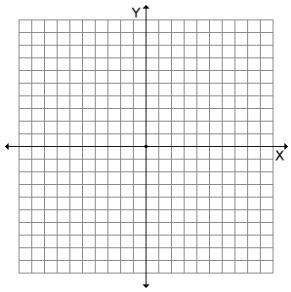

   e. $\frac{1}{4} x + 5 = y$

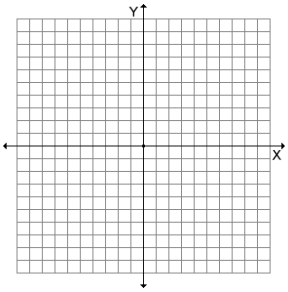

2. Write an equation in slope-intercept form, if possible, for a line that:
   a. Passes through the points (4,3) and (4,-5)

   b. Passes through the points (5,2) and (8,-3)

   c. Is perpendicular to the line $4x + 3y = 12$ and passes through the point (1,3)

   d. Is parallel to the line $-2x + y = -3$ and passes through the point (1,5)

3. The daily fixed cost to produce widgets is $5,750 and the cost to build a widget is $65. Each widget sells for $90.
   a. Find the cost equation for widgets.

   b. Find the revenue equation for widgets

   c. Find the profit equation for widgets

   d. What is the number of widgets you need to sell to break even?

   e. What is the profit if the company sells 500 widgets?

4. Farmer Brown is growing raspberries and is getting ready to sell them at the local farmer's market. The supply and demand functions for raspberries are

$$p = S(q) = 0.45q$$
$$p = D(q) = 4 - 0.35q$$

where p is the price per pint and q is the quantity in hundreds of pints.

   a. Find the price if the demand is 200 pints

   b. Find the demand if the price is $1.20 per pint

   c. Find the supply if the price is $1.62 per pint

   d. Find the equilibrium quantity and the equilibrium price

5. Jane borrows $25,000 at an interest rate of 9.25% compounded monthly to buy a new car. The terms of the loan require her to make monthly payments for the next 5 years. What will her monthly payment be?

6. Susan makes yearly semi-annual deposits of $2,500 into a savings account that earns 8.5% interest compounded semi-annually –
   a. How much money will be in the account 25 years from now?

   b. How much interest will Susan earn over 25 years?

7. Marianne deposits $5000 into an account that earns 8.75% interest. How much will be in her account in ten years if the interest is –
   a. Simple

   b. Compounded quarterly

   c. Compounded daily

8. Brittany and Kevin estimate that they can afford to pay $2500 for a monthly mortgage payment. If their mortgage is a 30 year mortgage at a rate of 6.4% compounded monthly:
   a. How much can they afford to borrow?

   b. How much interest will they end up paying at the end of the 30 year mortgage?

9. Mr. and Mrs. Smith are buying their first house which has a price of $318,000. They have a down payment of $31,800 and will take out a 15-year mortgage for the remainder of the cost of the house. The mortgage has an annual interest rate of 3.1%.
   a. Find the amount of the monthly payment

   b. Find the total amount of interest paid

10. For each of the following, solve the system if possible. If there is no solution, explain why not. If there are infinitely many solutions, describe all solutions.

    a. $$\begin{aligned} 2x+3y&=19 \\ x+4y&=22 \end{aligned}$$

    b. $$\begin{aligned} -3x+2y&=12 \\ 9x-6y&=-36 \end{aligned}$$

    c. $$\begin{aligned} 2x+3y&=15 \\ 6x+9y&=25 \end{aligned}$$

11. A candy store sells cashews for $6.50 per pound and peanuts for $2.50 per pound. If you want to buy exactly 4 pounds of nuts for $23.00, how many pounds of each kind should you buy?

12. A silo is made of a cone that fits perfectly on top of a cylinder. The diameter of the cone is 8 feet, the height of the cone is 3ft, and the slant height of the cone is 5 ft. The height of the cylinder is 10 ft. Find the volume and surface area of the silo (including the base).

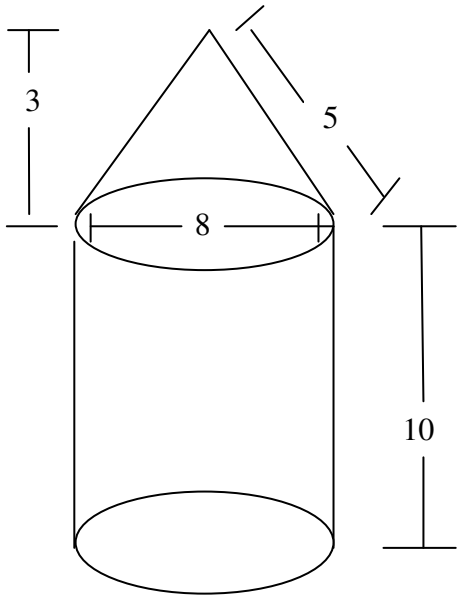

13. A 25 foot ladder is placed against a building. The bottom of the ladder is 7 feet from the building. If the top of the ladder slips down 4 feet, how many feet will the bottom slide out? No, it is not 4 feet. This is a two-step problem, so draw two right triangles.

14. In the figure below AE and ST intersect at N, AS = 16mm, SN = 30mm, NT = 15mm, and AE = 51mm, find NE

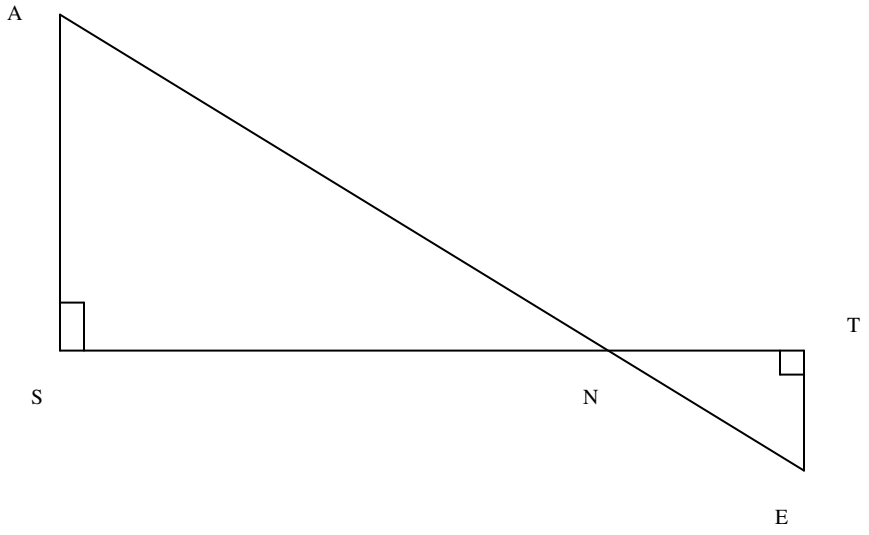

15. In the figure below, AB = 6 in, BC = 10 in and BE = 9 in, find CD

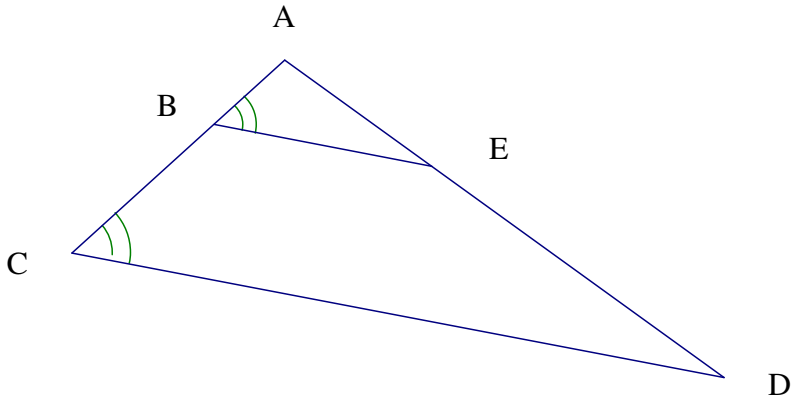

16. Find the area and perimeter of the shape shown below:

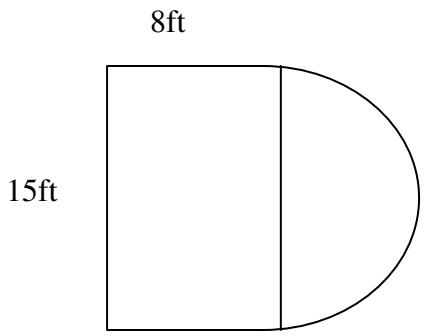

17. A Cabrini intern needs to design a brick patio for her client. She needs to allow room for a hot tub with a diameter of 6 feet. What is the area that needs to be covered in brick? (round to the nearest square foot)

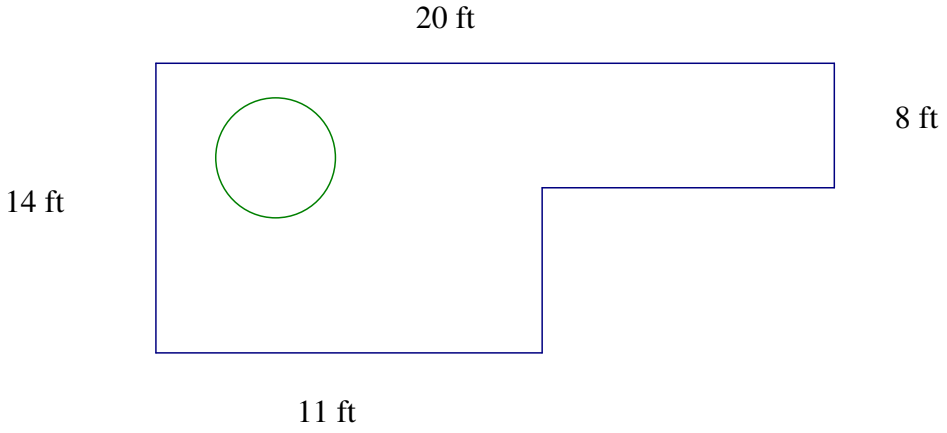

18. Using this drawing of an ice cream cone,

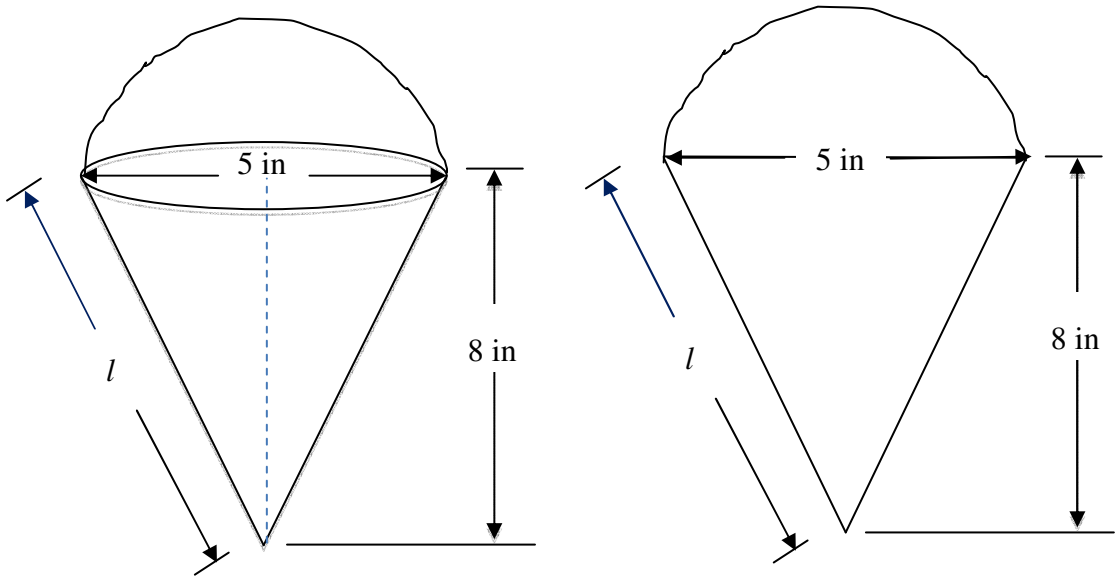

a. What is the volume of ice cream and cone shown in the picture on the left?

b. What is the surface area of this ice cream and cone in the picture on the left?

c. What is the area of the picture on the right?

d. What is the perimeter of the picture on the right?